PRODUCED BY AN AUTODESK EDUCATIONAL PRODUCT

NOTES:

REV	DATE	DRAWN BY	APPRV'D BY	DESCRIPTION

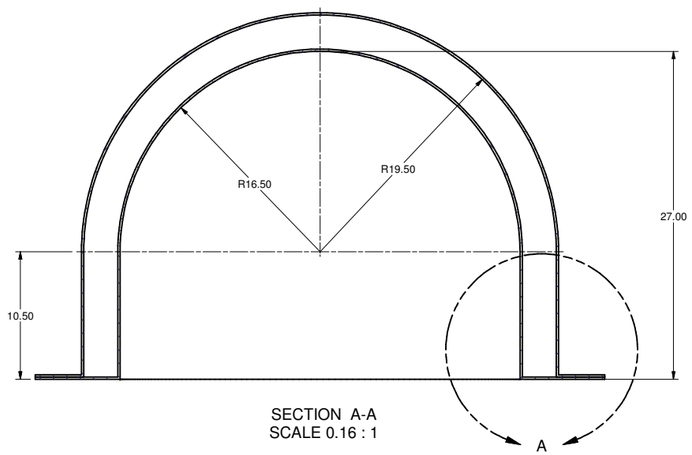

SECTION A-A
SCALE 0.16 : 1

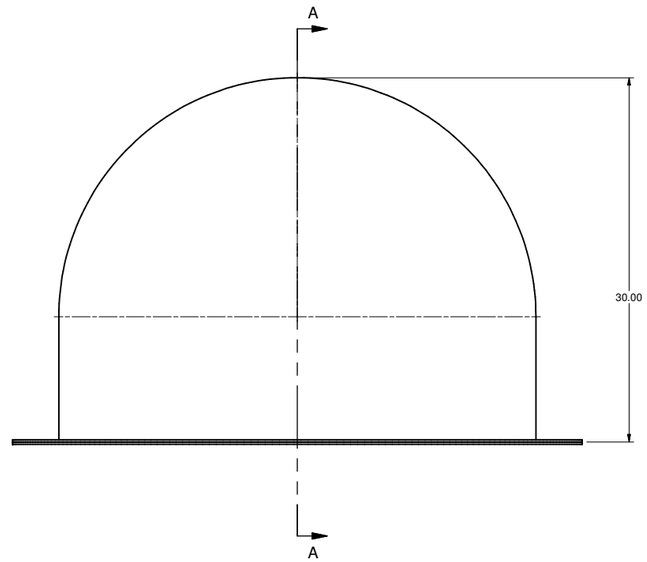

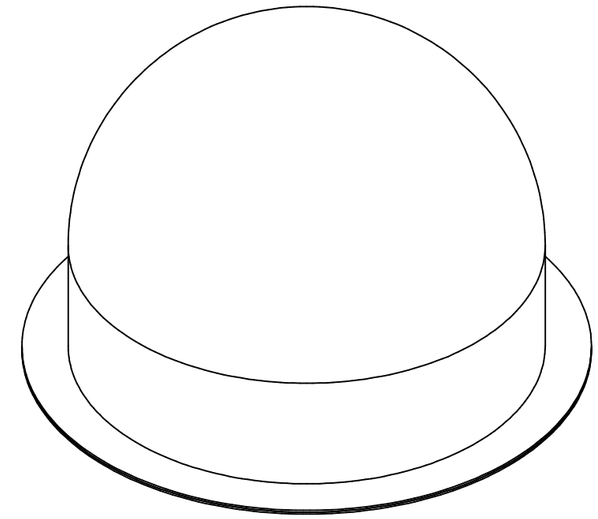

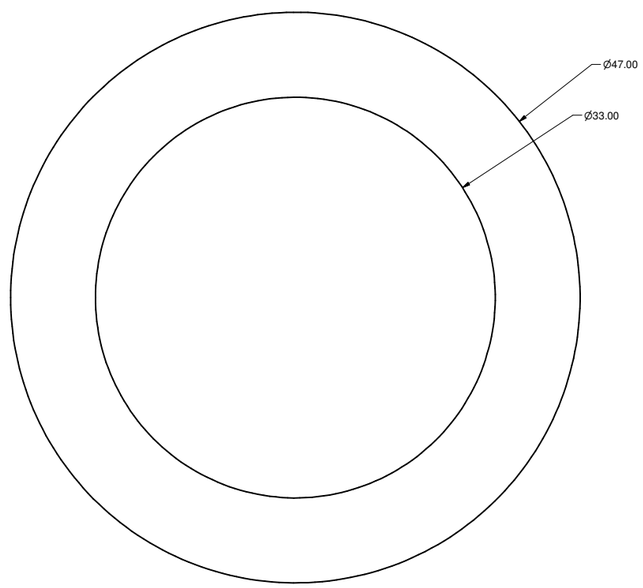

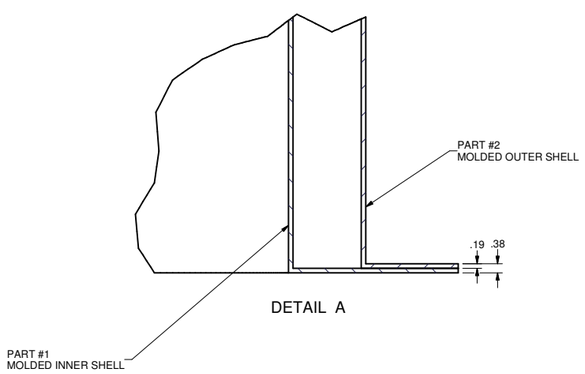

DETAIL A

INVENTOR : Vault concept003 (2 parts).idw

NEXT ASSEMBLY	DWG. TYPE

UNLESS OTHERWISE SPECIFIED
DIMENSIONS ARE IN INCHES

TOLERANCES : ANGLES ± 1°
4 PLACE DECIMALS (.XXXX) ±
3 PLACE DECIMALS (.XXX) ± .005
2 PLACES DECIMALS (.XX) ±
1 PLACE DECIMALS (.X) ±

MATERIAL:
UV RESISTANT PLASTIC

FINISH:

PROJECT: SENSOR VAULT

TITLE: UV RESISTANT PLASTIC
VAULT-003
2 PARTS

PASSCAL
POLAR PROJECTS
SOCORRO, NM 87801

DRAWN BY	B. BONNETT	DATE	9/6/2007
DESIGNED BY	B. BONNETT	DATE	9/6/2007
APPROVED BY		DATE	

SHEET NUMBER 1 OF 1 | REV: - | SCALE 1 | DRAWING NUMBER Vault concept003 (2 parts)

PRODUCED BY AN AUTODESK EDUCATIONAL PRODUCT