PRODUCED BY AN AUTODESK EDUCATIONAL PRODUCT

REV	DATE	DRAWN BY	APPRV'D BY	DESCRIPTION
A	10/01/07	B. BONNETT	B. BONNETT	CHANGED PANEL UPRIGHT DIMS ADDED ANGLE PNL MNT & FR. BRACE
B	10/23/07	B. BONNETT	B. BONNETT	ADDED HOLES FOR PANEL BACKING
C	06/17/08	B. BONNETT	B. BONNETT	CHANGED FRONT BRACE MATRL

NOTES:

1. REMOVE ALL BURRS AND SHARP EDGES
2. 39' OF 3" X 2" X 0.25" AL ANGLE REQUIRED
3. 23' OF 2" X 2" X 0.188" AL ANGLE REQUIRED
4. 16' OF 1.5" X 1.5" X 0.125" AL ANGLE REQUIRED

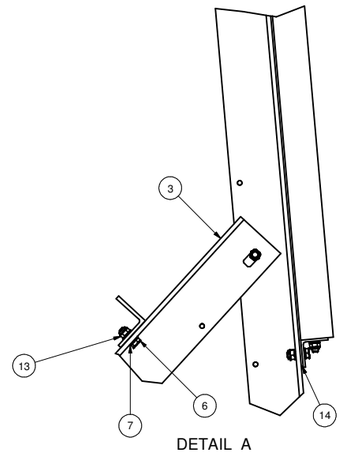

DETAIL A

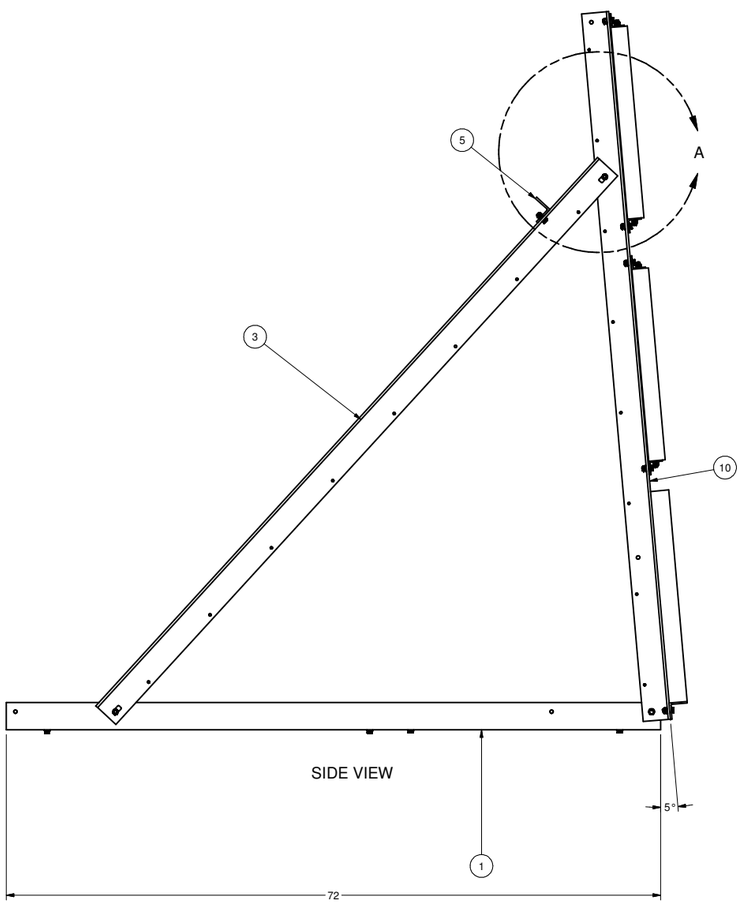

SIDE VIEW

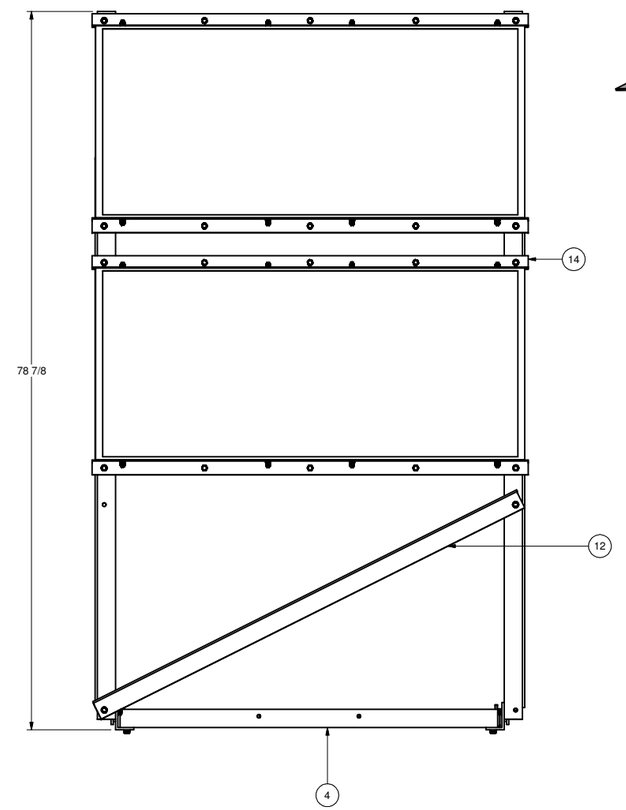

FRONT VIEW

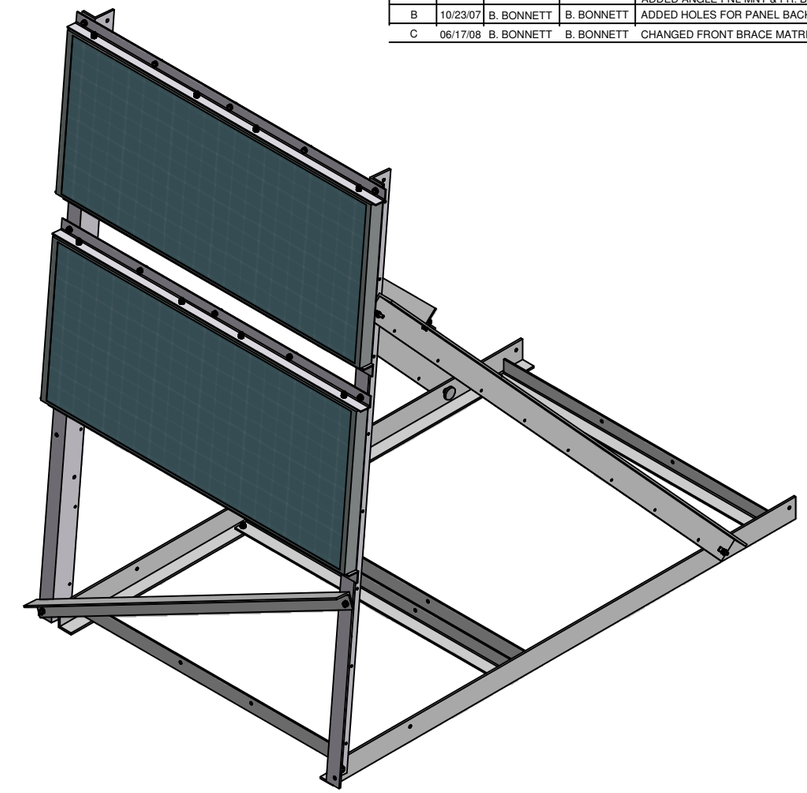

ITEM	MANUFACTURER	PART NUMBER	DESCRIPTION	QTY
14	PASSCAL	SOLAR PANEL BACKING	.090" ALUMINUM SHEET	2
13	McMASTER	95615A160	5/16-18 Nylock Nut	56
12	PASSCAL	Front brace	2" x 2" x .188" AL ANGLE	1
14	PASSCAL	Sharp Panel Angle	1.5" X 1.5" X .125" AL ANGLE	4
10	PASSCAL	Panel Upright	3" x 2" x .25" AL ANGLE	2
9	McMASTER	Knob Bolt 5-16x1.5 UNC	MC pn 6079K19	4
8	McMASTER	Weld nut	MC pn 94579A500	4
7	BARNHILL BOLT	304-516-A-01	Washer, Fl, 5/16	104
6	BARNHILL BOLT	50-516-1-51	5/16 -18 x 1" HEX BOLT	52
5	PASSCAL	Back horizontal brace	2" x 2" x .188" AL ANGLE	1
4	PASSCAL	Bottom horizontal brace	2" x 2" x .188" AL ANGLE	4
3	PASSCAL	Rear Support	3" x 2" x .25" AL ANGLE	2
2	SHARP	Sharp 80W panel	SHARP pn NE-80EJEA	2
1	PASSCAL	Base	3" x 2" x .25" AL ANGLE	2

INVENTOR : POLENET Angle Mount.idw

NEXT ASSEMBLY	DWG. TYPE

UNLESS OTHERWISE SPECIFIED
DIMENSIONS ARE IN INCHES

TOLERANCES : ANGLES ± 1°
4 PLACE DECIMALS (.XXXX) ±
3 PLACE DECIMALS (.XXX) ± .005
2 PLACES DECIMALS (.XX) ± .01
1 PLACE DECIMALS (.X) ±

MATERIAL:
6061-T6

FINISH:

PROJECT: POLAR

TITLE: POLENET ALUMINUM ANGLE
SOLAR PANEL MOUNT

PASSCAL
POLAR PROJECTS
SOCORRO, NM 87801

DRAWN BY	B. BONNETT	DATE 8/14/2007
DESIGNED BY	B. BONNETT	DATE 8/14/2007
APPROVED BY		DATE

SHEET NUMBER 1 OF 7 | REV. C | SCALE 1 | DRAWING NUMBER POLENET Angle Mount

PRODUCED BY AN AUTODESK EDUCATIONAL PRODUCT

PRODUCED BY AN AUTODESK EDUCATIONAL PRODUCT

NOTES:

REV	DATE	DRAWN BY	APPRV'D BY	DESCRIPTION

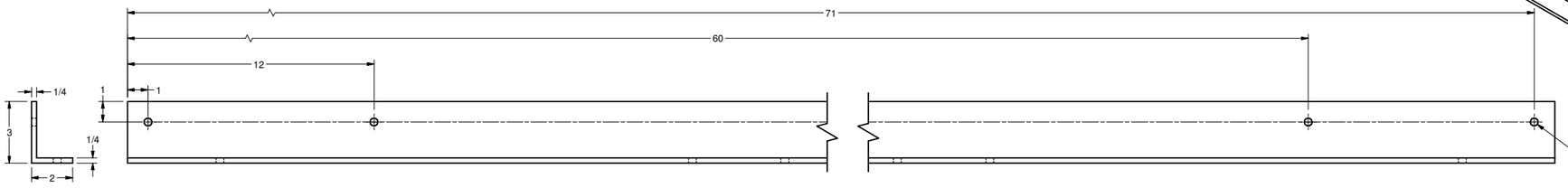

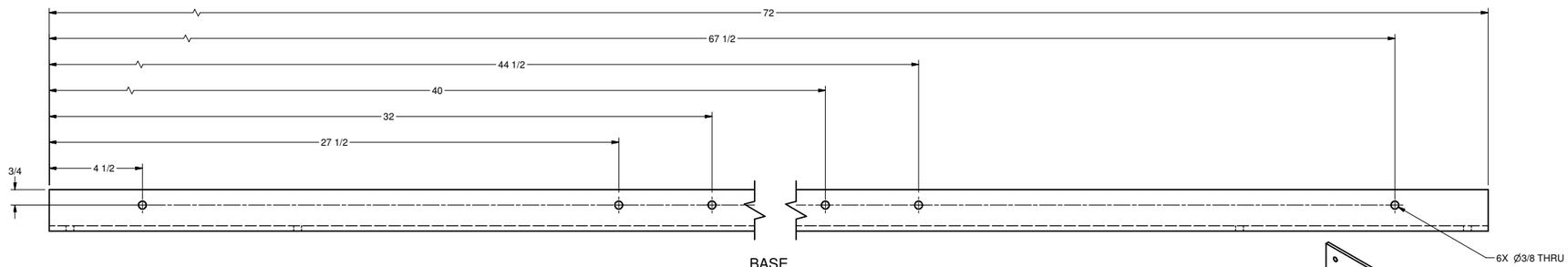

BASE
QTY: 2
MATRL: 6061 ALUMINUM ANGLE

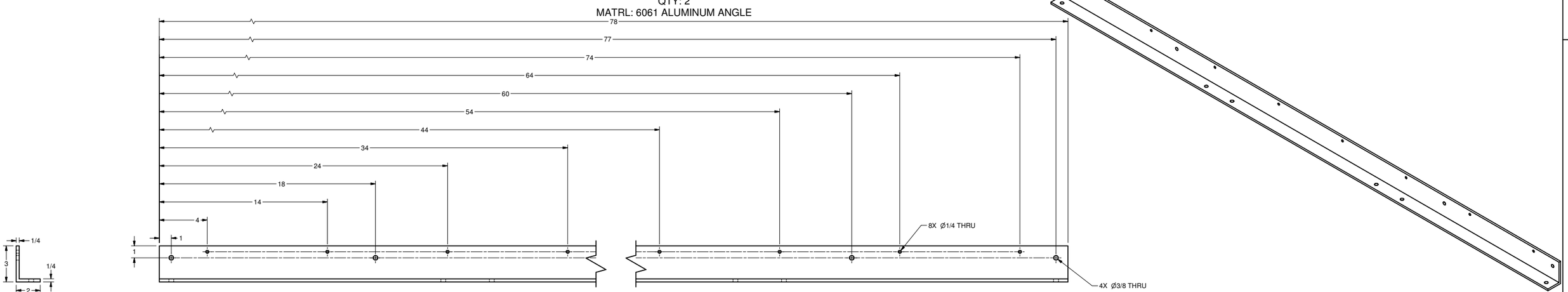

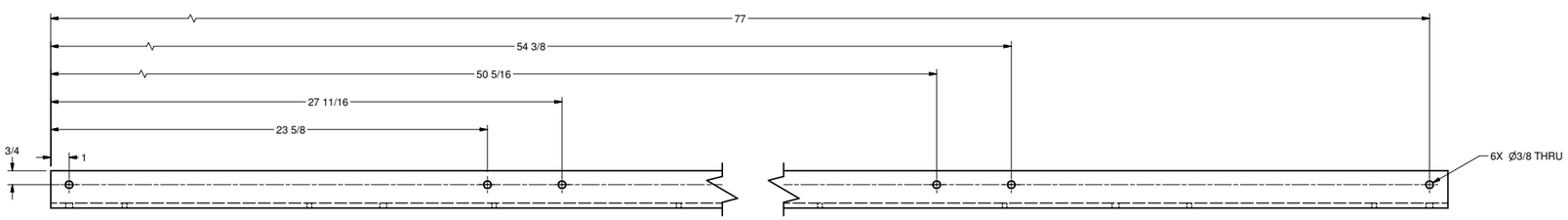

PANEL UPRIGHT
QTY: 2
MATRL: 6061 ALUMINUM ANGLE

INVENTOR : POLENET Angle Mount.idw

NEXT ASSEMBLY	DWG. TYPE

UNLESS OTHERWISE SPECIFIED
DIMENSIONS ARE IN INCHES

TOLERANCES : ANGLES ±	1°
4 PLACE DECIMALS (X.XXXX) ±	
3 PLACE DECIMALS (.XXX) ±	.005
2 PLACE DECIMALS (.XX) ±	.01
1 PLACE DECIMALS (.X) ±	

MATERIAL:
6061-T6

FINISH:

SIZE D — FORM — CD

POLAR

TITLE
POLENET ALUMINUM ANGLE
SOLAR PANEL MOUNT

PASSCAL
POLAR PROJECTS
SOCORRO, NM 87801

DRAWN BY: B. BONNETT	DATE: 8/14/2007
DESIGNED BY: B. BONNETT	DATE: 8/14/2007
APPROVED BY	DATE

SHEET NUMBER 2 OF 7 | REV. C | SCALE 1 | DRAWING NUMBER POLENET Angle Mount

PRODUCED BY AN AUTODESK EDUCATIONAL PRODUCT

PRODUCED BY AN AUTODESK EDUCATIONAL PRODUCT

REV	DATE	DRAWN BY	APPRV'D BY	DESCRIPTION

NOTES:

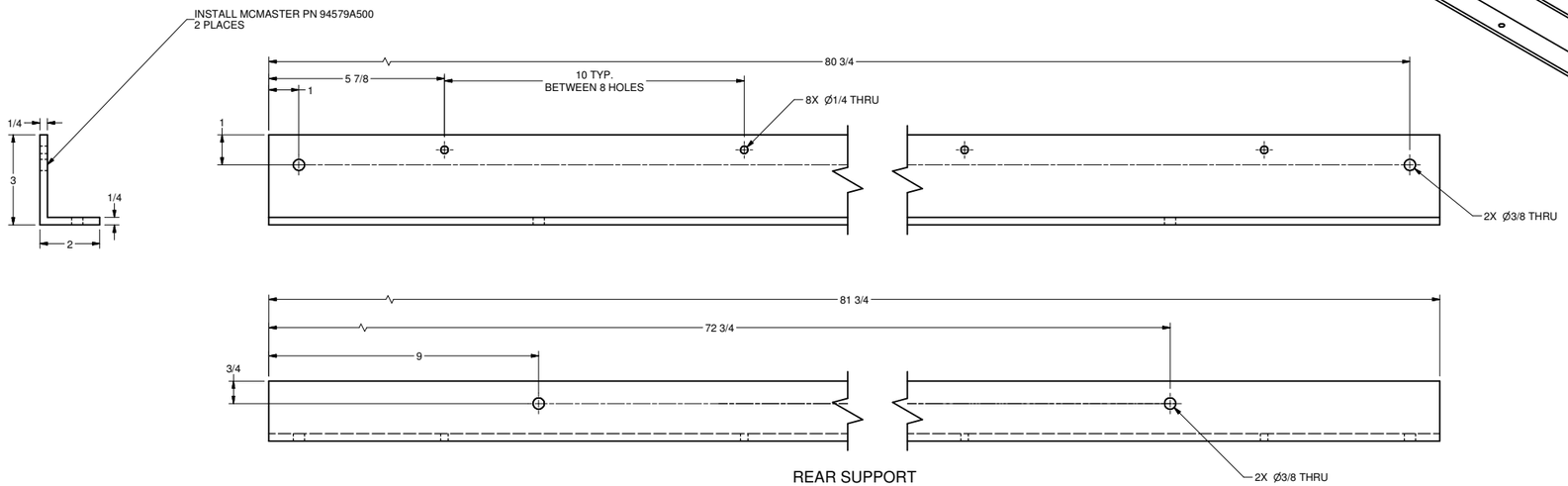

REAR SUPPORT
QTY: 2
MATRL: 6061 ALUMINUM ANGLE

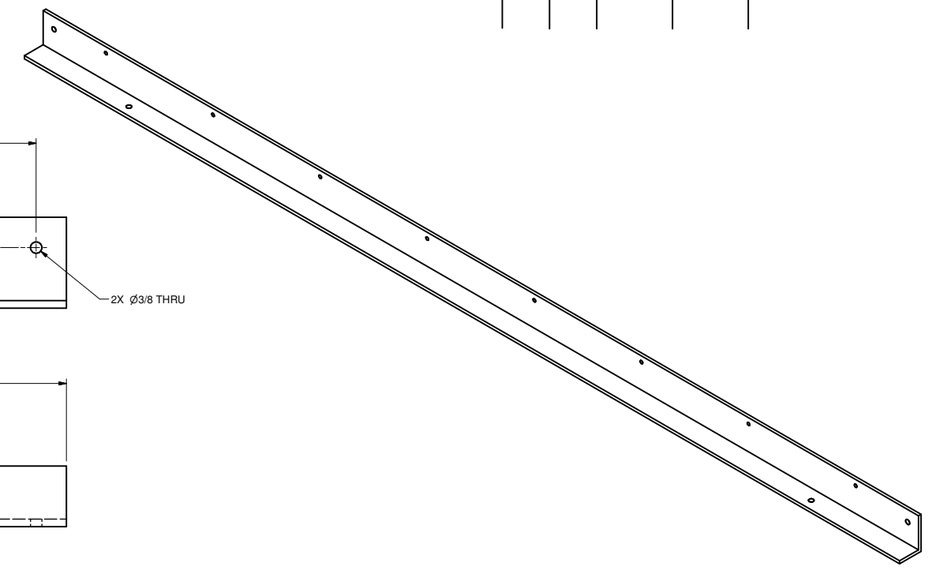

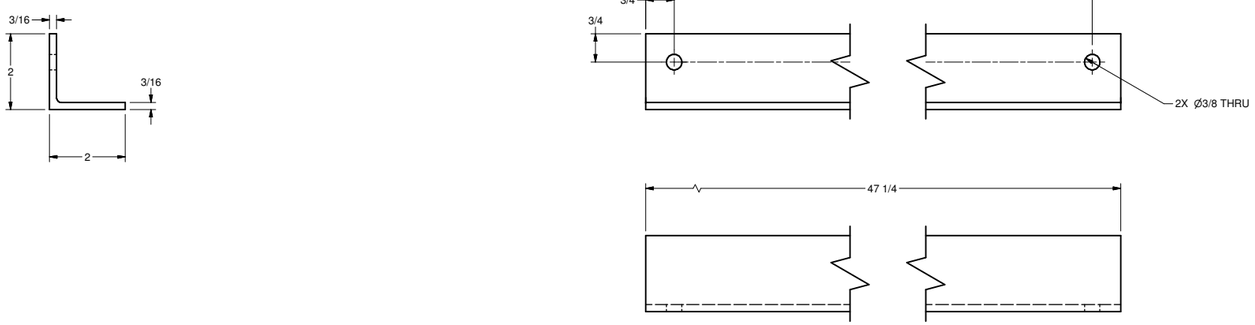

BACK HORIZONTAL BRACE
QTY: 1
MATRL: 6061 ALUMINUM ANGLE

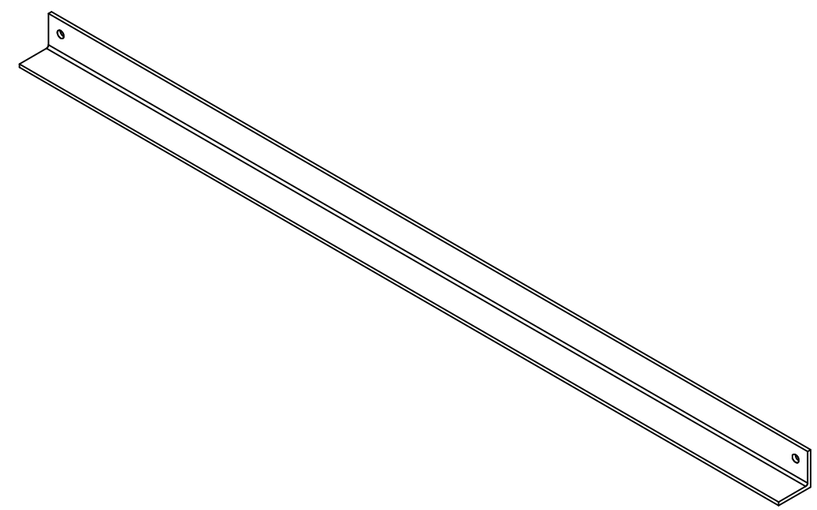

INVENTOR : POLENET Angle Mount.idw

NEXT ASSEMBLY	DWG. TYPE

UNLESS OTHERWISE SPECIFIED
DIMENSIONS ARE IN INCHES
TOLERANCES : ANGLES ± 1°
4 PLACE DECIMALS (.XXXX) ± .0005
3 PLACE DECIMALS (.XXX) ± .005
2 PLACES DECIMALS (.XX) ± .01
1 PLACE DECIMALS (.X) ± .1

MATERIAL:
6061-T6

FINISH:

PROJECT: POLAR

TITLE: POLENET ALUMINUM ANGLE
SOLAR PANEL MOUNT

PASSCAL
POLAR PROJECTS
SOCORRO, NM 87801

		DATE
DRAWN BY	B. BONNETT	8/14/2007
DESIGNED BY	B. BONNETT	8/14/2007
APPROVED BY		DATE

SHEET NUMBER 3 OF 7 | REV. C | SCALE 1 | DRAWING NUMBER POLENET Angle Mount

PRODUCED BY AN AUTODESK EDUCATIONAL PRODUCT

PRODUCED BY AN AUTODESK EDUCATIONAL PRODUCT

NOTES:

REV	DATE	DRAWN BY	APPRV'D BY	DESCRIPTION

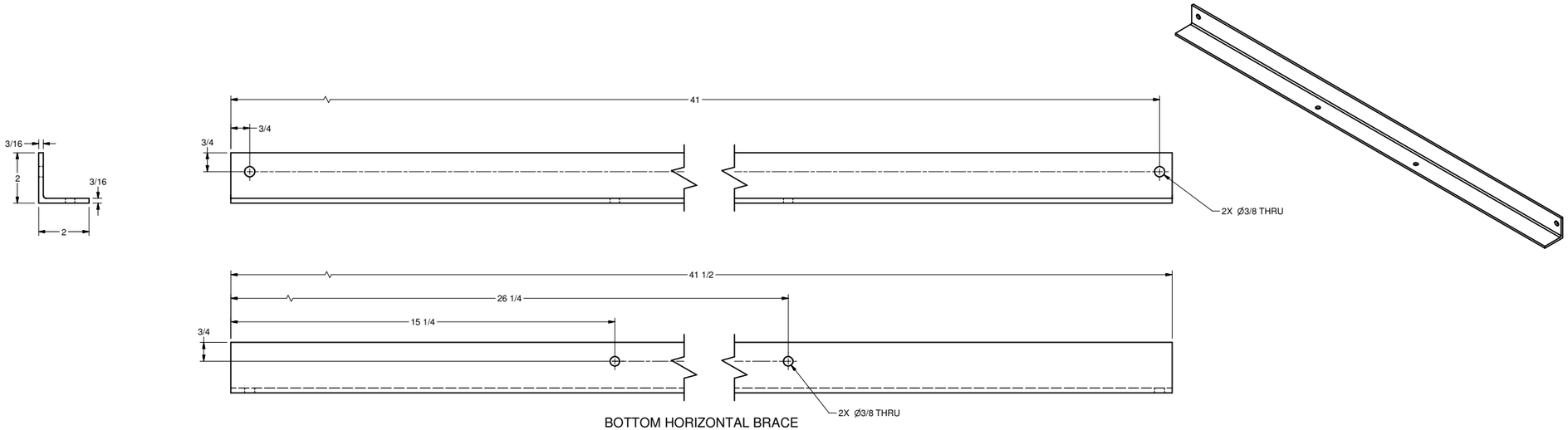

BOTTOM HORIZONTAL BRACE
QTY: 4
MATRL: 6061 ALUMINUM ANGLE

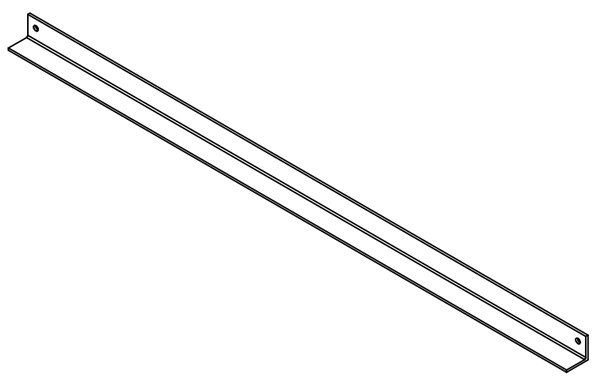

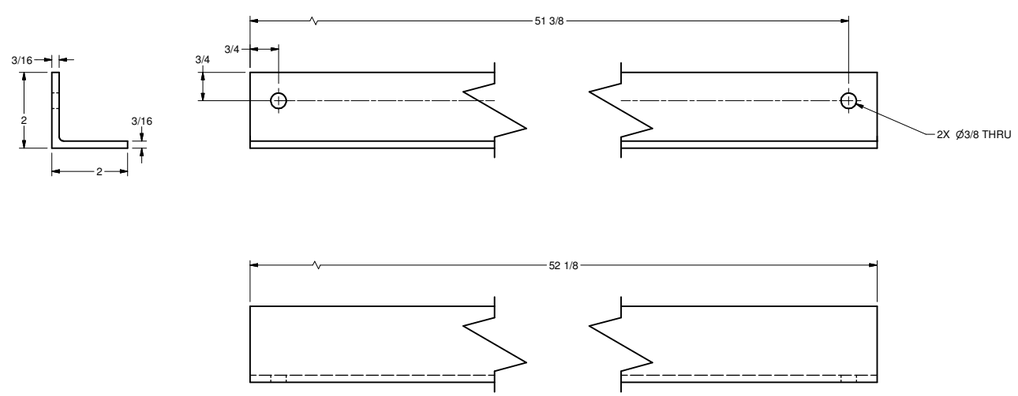

FRONT BRACE
QTY: 1
MATRL: 6061 ALUMINUM ANGLE

INVENTOR : POLENET Angle Mount.idw

NEXT ASSEMBLY	DWG. TYPE

UNLESS OTHERWISE SPECIFIED
DIMENSIONS ARE IN INCHES

TOLERANCES : ANGLES ±	1°
4 PLACE DECIMALS (.XXXX) ±	
3 PLACE DECIMALS (.XXX) ±	.005
2 PLACES DECIMALS (.XX) ±	.01
1 PLACE DECIMALS (.X) ±	

MATERIAL:
6061-T6

FINISH:

DESCRIPTION: POLAR

TITLE: POLENET ALUMINUM ANGLE
SOLAR PANEL MOUNT

PASSCAL
POLAR PROJECTS
SOCORRO, NM 87801

DRAWN BY: B. BONNETT	DATE: 8/14/2007	
DESIGNED BY: B. BONNETT	DATE: 8/14/2007	
APPROVED BY:	DATE:	

SHEET NUMBER 4 OF 7 | REV. C | SCALE 1 | DRAWING NUMBER POLENET Angle Mount

PRODUCED BY AN AUTODESK EDUCATIONAL PRODUCT

PRODUCED BY AN AUTODESK EDUCATIONAL PRODUCT

NOTES:

REV	DATE	DRAWN BY	APPRV'D BY	DESCRIPTION

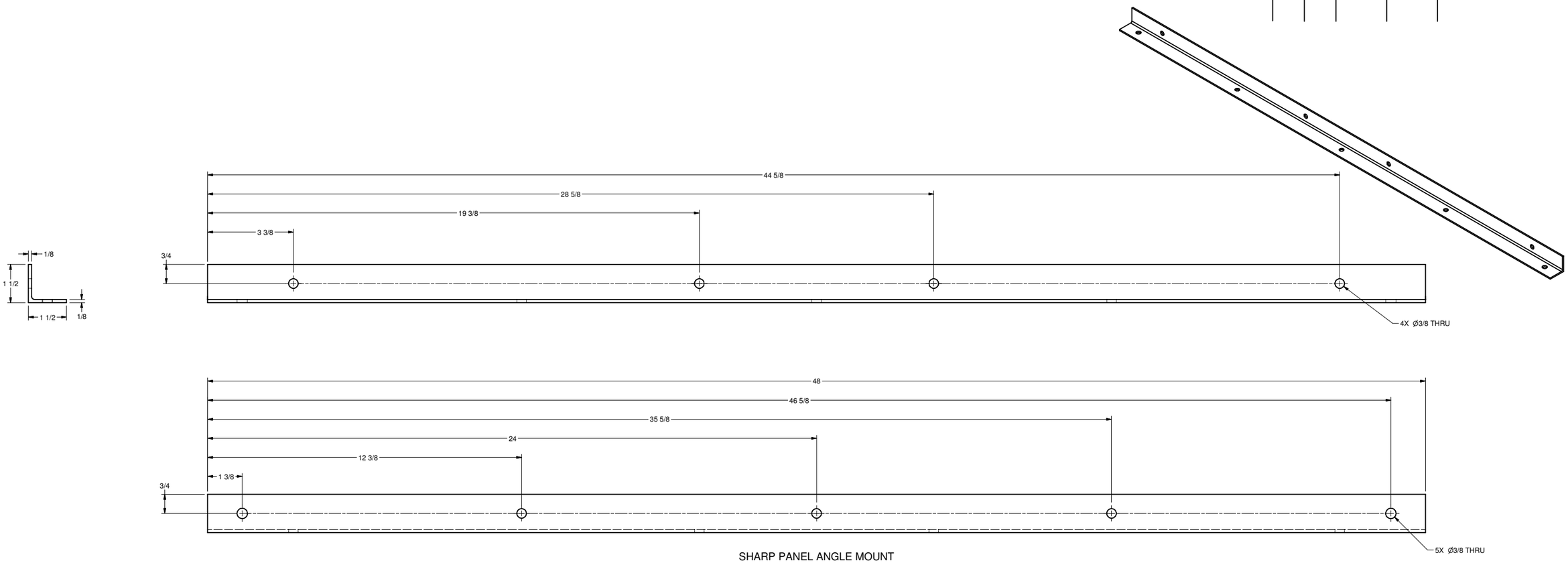

SHARP PANEL ANGLE MOUNT
QTY: 4
MATRL: 6061 ALUMINUM ANGLE

INVENTOR : POLENET Angle Mount.idw

NEXT ASSEMBLY	DWG. TYPE

UNLESS OTHERWISE SPECIFIED
DIMENSIONS ARE IN INCHES

TOLERANCES : ANGLES ±	1°
4 PLACE DECIMALS (XXXX) ±	
3 PLACE DECIMALS (XXX) ±	.005
2 PLACES DECIMALS (XX) ±	.01
1 PLACE DECIMALS (X) ±	

MATERIAL:
6061-T6
FINISH:

TOLERANCE

POLAR

TITLE
POLENET ALUMINUM ANGLE
SOLAR PANEL MOUNT

PASSCAL
POLAR PROJECTS
SOCORRO, NM 87801

DRAWN BY: B. BONNETT	DATE: 8/14/2007	
DESIGNED BY: B. BONNETT	DATE: 8/14/2007	
APPROVED BY:	DATE:	

SHEET NUMBER 5 OF 7 | REV. C | SCALE 1 | DRAWING NUMBER POLENET Angle Mount

PRODUCED BY AN AUTODESK EDUCATIONAL PRODUCT

PRODUCED BY AN AUTODESK EDUCATIONAL PRODUCT

NOTES:

REV	DATE	DRAWN BY	APPRV'D BY	DESCRIPTION

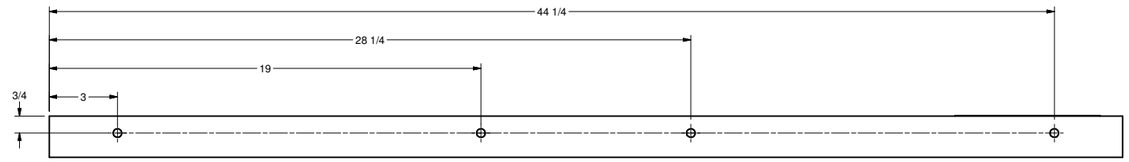

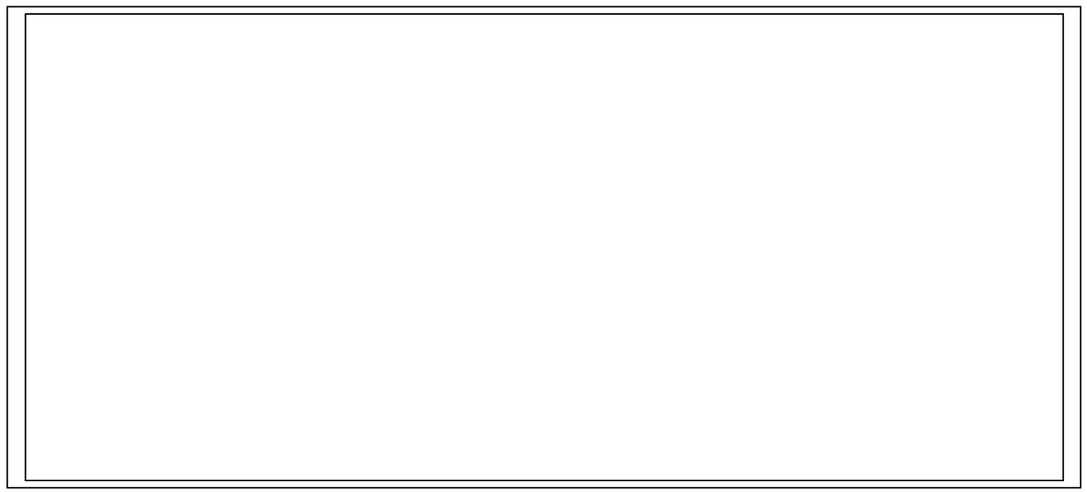

SHARP NE-80EJEA
FRONT VIEW
QTY: 2

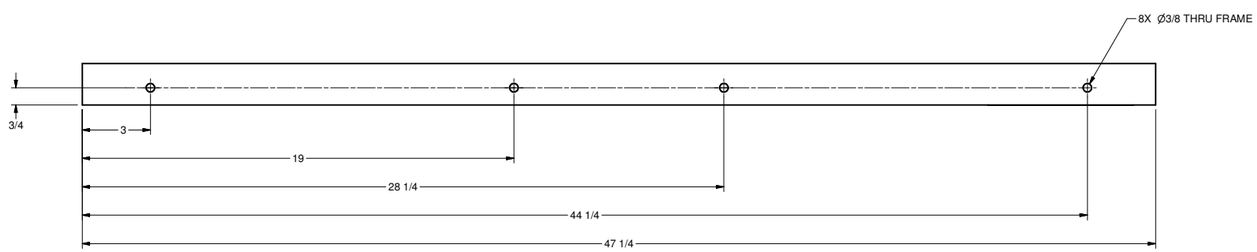

INVENTOR : POLENET Angle Mount.idw

NEXT ASSEMBLY	DWG. TYPE

UNLESS OTHERWISE SPECIFIED
DIMENSIONS ARE IN INCHES

TOLERANCES : ANGLES ±	1°
4 PLACE DECIMALS (.XXXX) ±	
3 PLACE DECIMALS (.XXX) ±	.005
2 PLACE DECIMALS (.XX) ±	.01
1 PLACE DECIMALS (.X) ±	

MATERIAL:
6061-T6

FINISH:

DO NOT SCALE

TITLE: POLAR

POLENET ALUMINUM ANGLE
SOLAR PANEL MOUNT

PASSCAL
POLAR PROJECTS
SOCORRO, NM 87801

DRAWN BY	B. BONNETT	DATE 8/14/2007
DESIGNED BY	B. BONNETT	DATE 8/14/2007
APPROVED BY		DATE

SHEET NUMBER 6 OF 7 | REV. C | SCALE 1 | DRAWING NUMBER POLENET Angle Mount

PRODUCED BY AN AUTODESK EDUCATIONAL PRODUCT

PRODUCED BY AN AUTODESK EDUCATIONAL PRODUCT

NOTES:

1 REMOVE ALL BURRS AND SHARP EDGES

REV	DATE	DRAWN BY	APPRV'D BY	DESCRIPTION

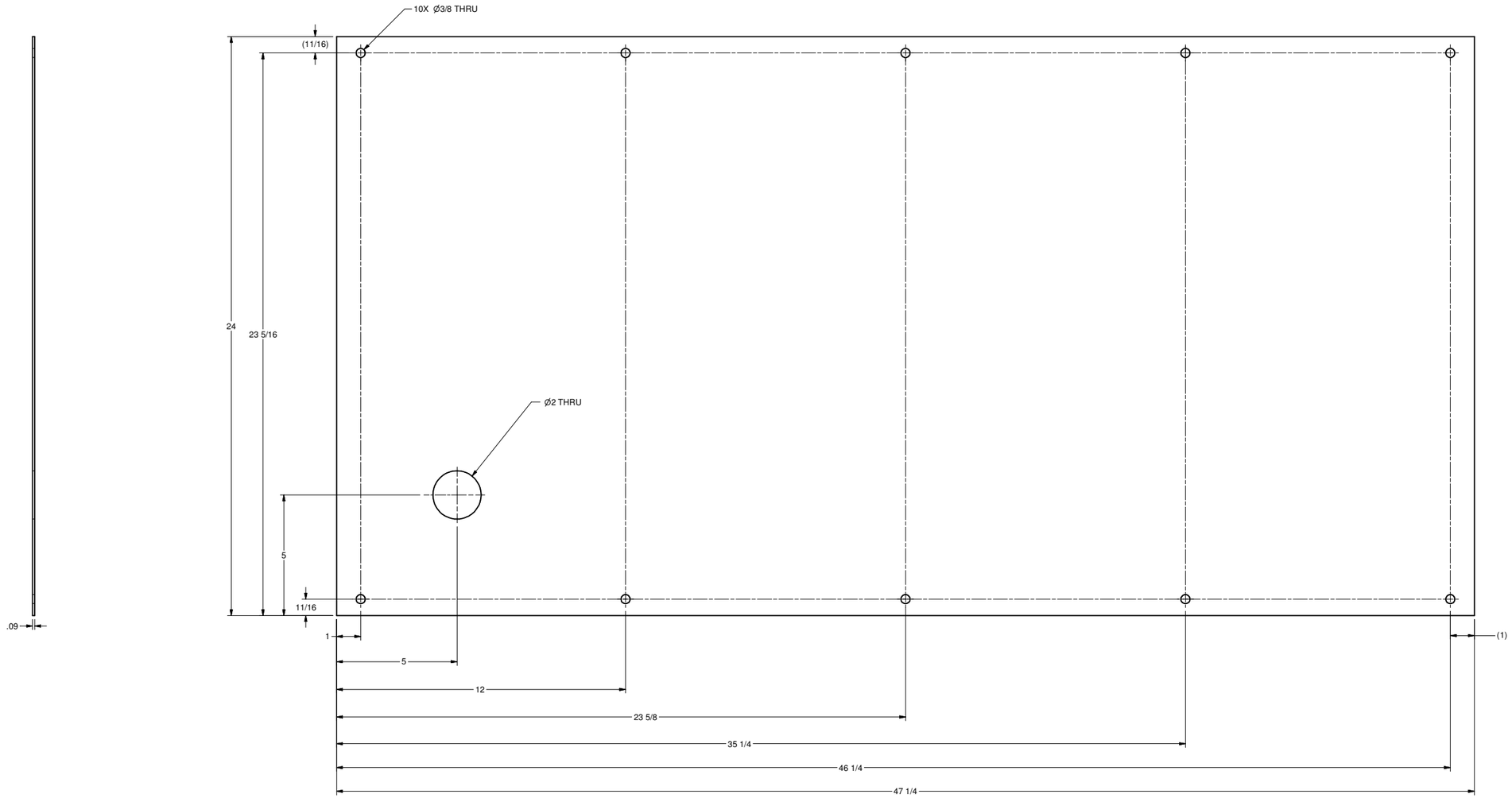

SOLAR PANEL BACKING
QTY: 2
MATRL: ALUMINUM SHEET

INVENTOR : POLENET Angle Mount.idw

NEXT ASSEMBLY	DWG. TYPE

UNLESS OTHERWISE SPECIFIED
DIMENSIONS ARE IN INCHES

TOLERANCES : ANGLES ± 1°
4 PLACE DECIMALS (.XXXX) ±
3 PLACE DECIMALS (.XXX) ± .005
2 PLACES DECIMALS (.XX) ± .01
1 PLACE DECIMALS (.X) ±

MATERIAL:
6061-T6

FINISH:

PROJECT: POLAR

TITLE: POLENET ALUMINUM ANGLE
SOLAR PANEL MOUNT

PASSCAL
POLAR PROJECTS
SOCORRO, NM 87801

	DRAWN BY	DATE
	B. BONNETT	8/14/2007
DESIGNED BY	B. BONNETT	8/14/2007
APPROVED BY		DATE

SHEET NUMBER 7 OF 7 | REV. C | SCALE 1 | DRAWING NUMBER POLENET Angle Mount

PRODUCED BY AN AUTODESK EDUCATIONAL PRODUCT